DIGITAL DESIGNER 4.2

Model Name:
Station-Robot-EV3-1

Number of Bricks: **91**

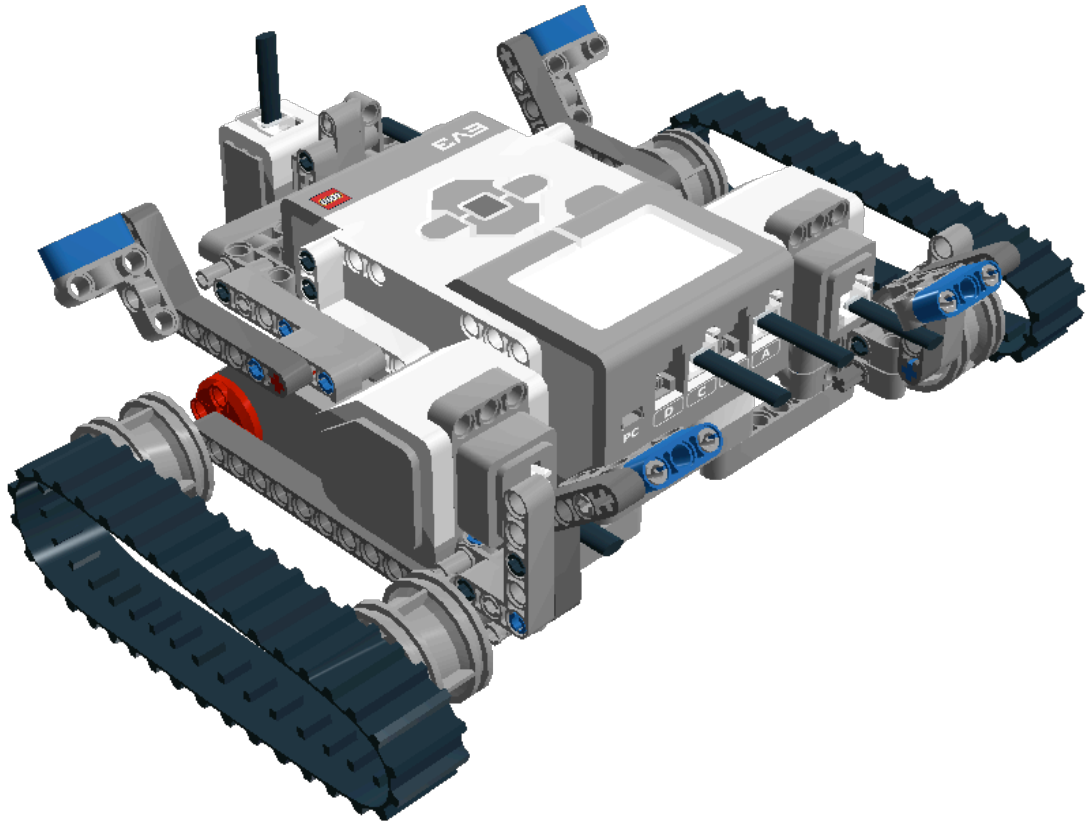

Step 1 of 40

1 x

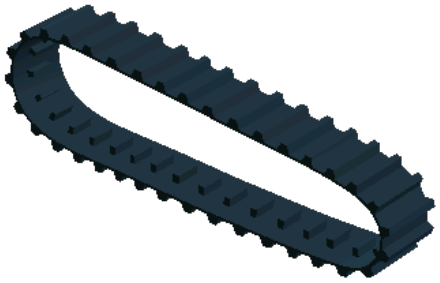

Step 2 of 40

1 x

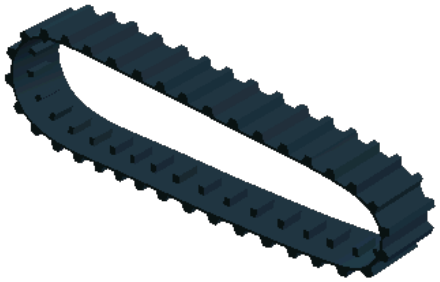

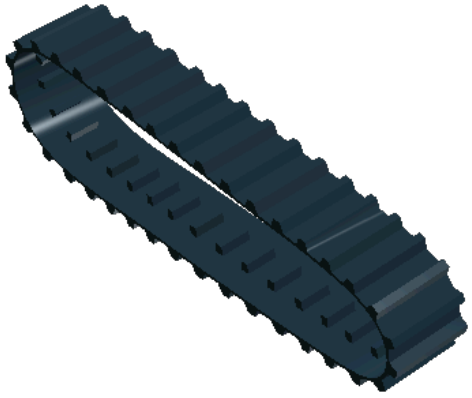

Step 3 of 40

1 x

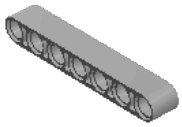

Step 4 of 40

1 x

1 x

1 x

1 x

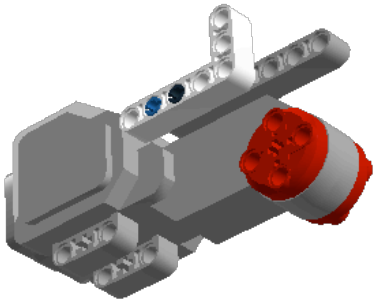

Step 5 of 40

2 x

1 x

1 x

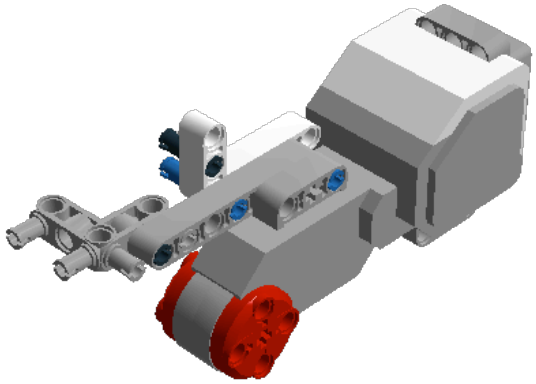

Step 6 of 40

1 x

1 x

2 x

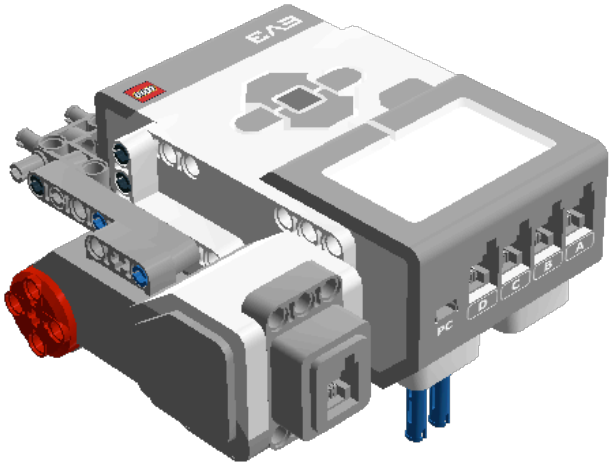

Step 7 of 40

1 x

1 x

2 x

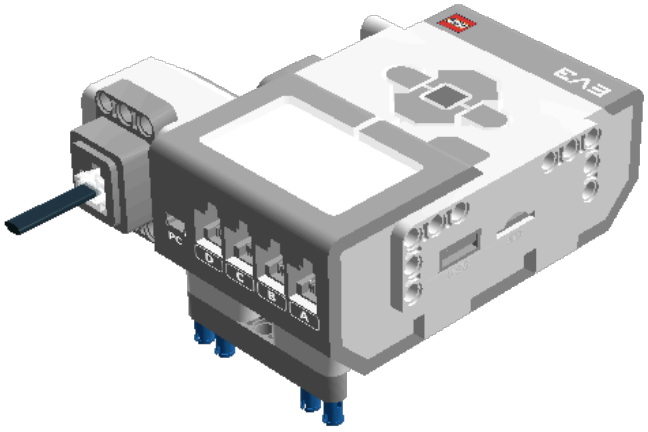

Step 8 of 40

1 x

Step 9 of 40

1 x

1 x

1 x

1 x

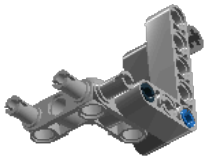

Step 10 of 40

1 x

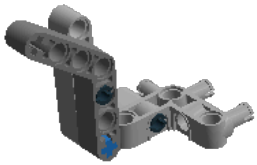

Step 11 of 40

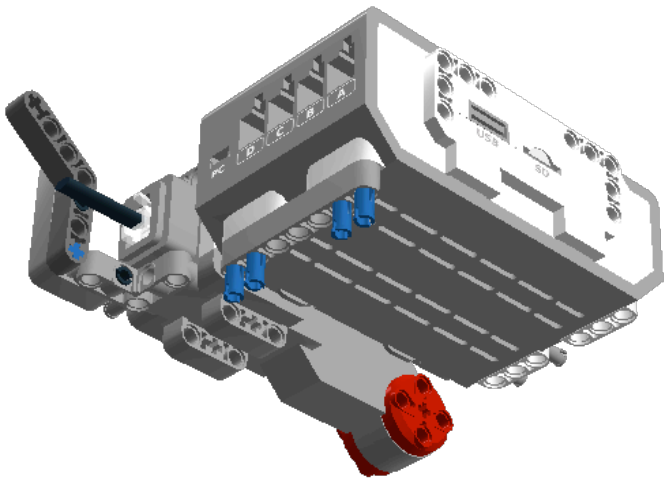

Step 12 of 40

2 x

1 x

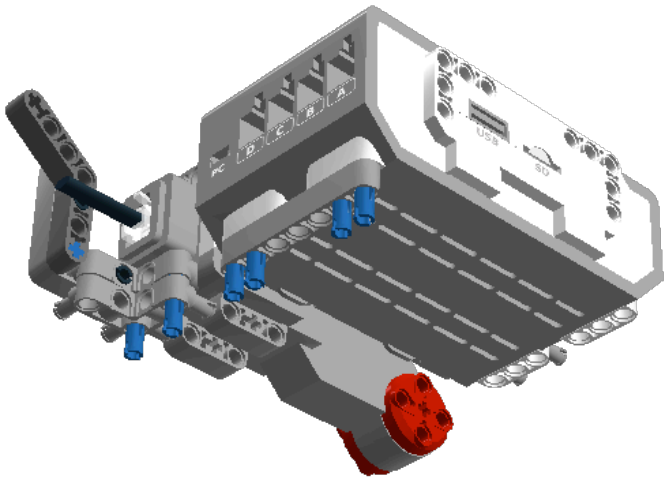

Step 13 of 40

1 x

1 x

1 x

1 x

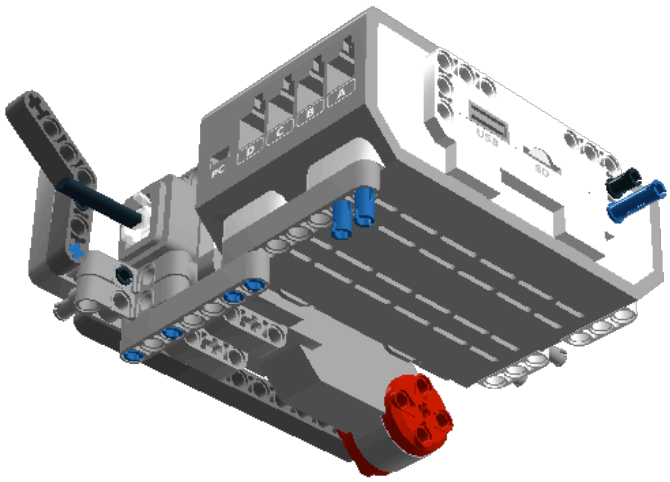

Step 14 of 40

1 x

2 x

1 x

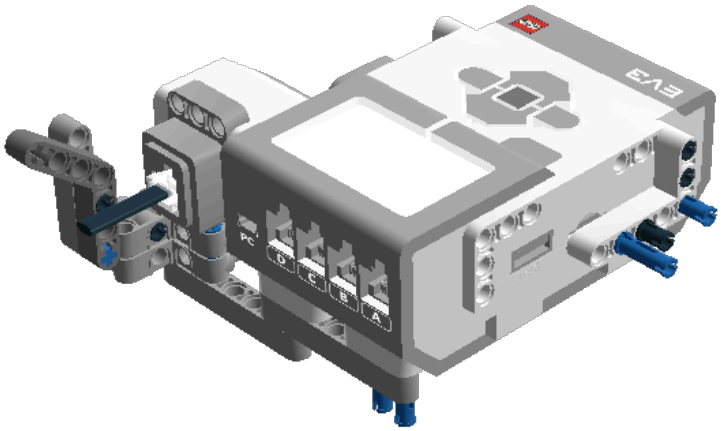

Step 15 of 40

1 x

1 x

Step 16 of 40

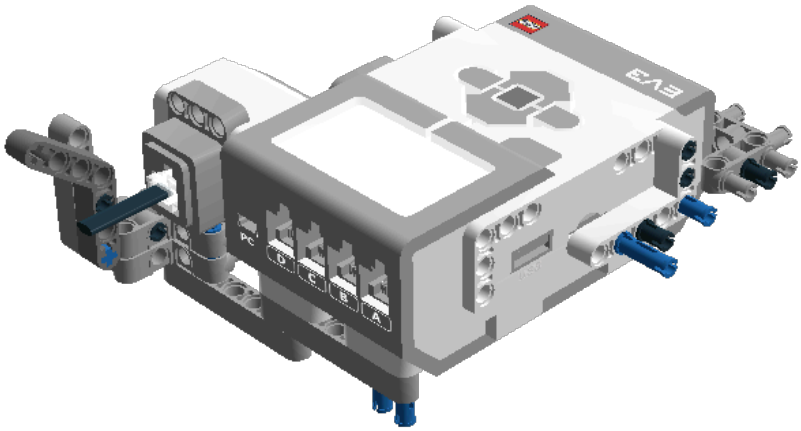

Step 17 of 40

1 x

1 x

1 x

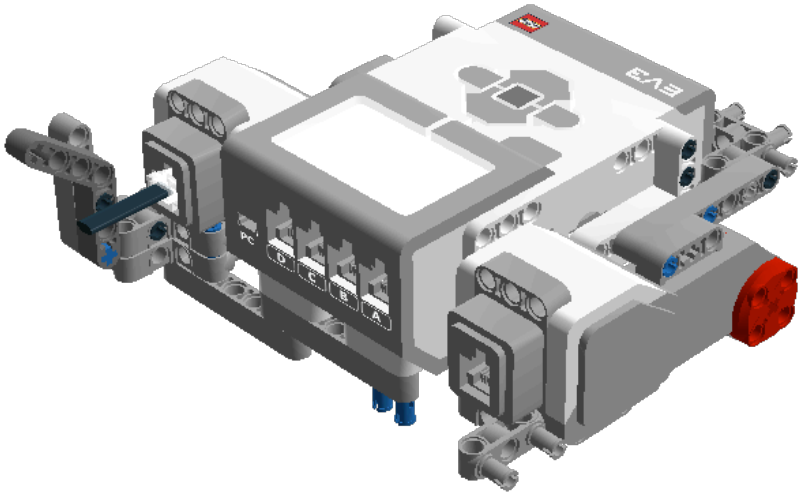

Step 18 of 40

1 x

2 x

1 x

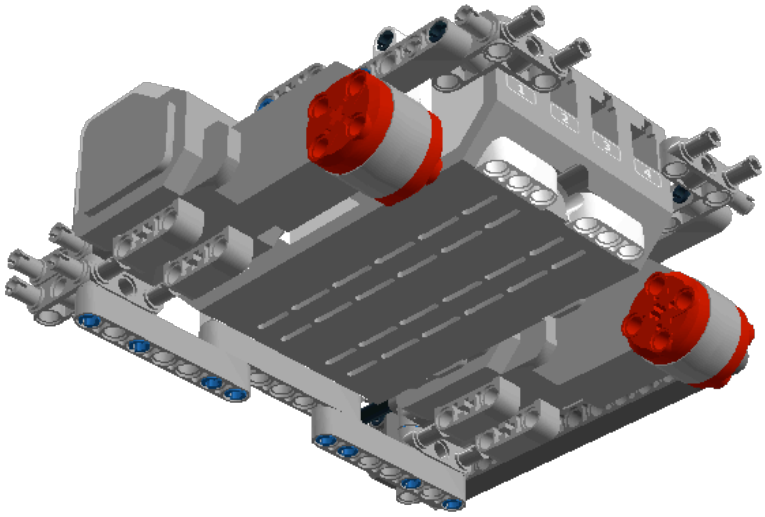

Step 19 of 40

1 x

1 x

1 x

1 x

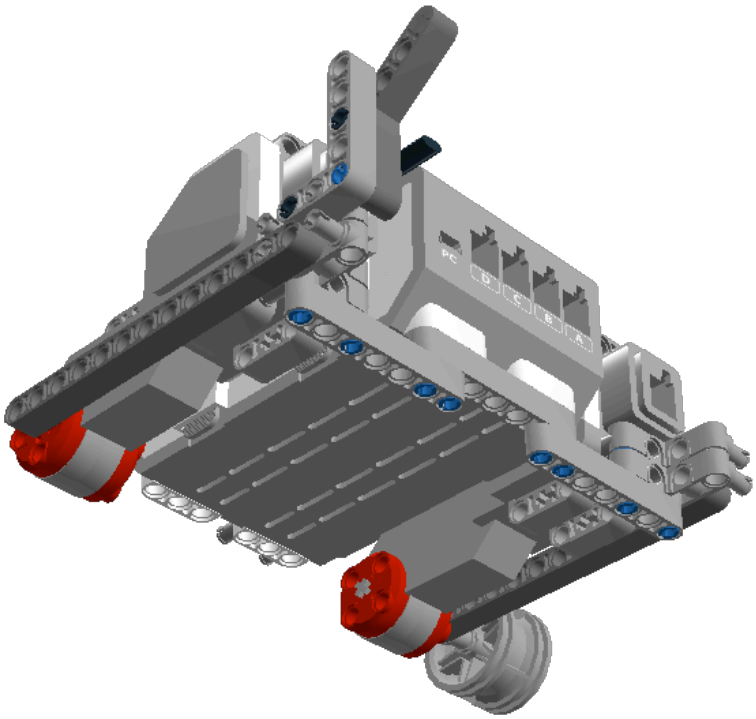

Step 20 of 40

1 x

1 x

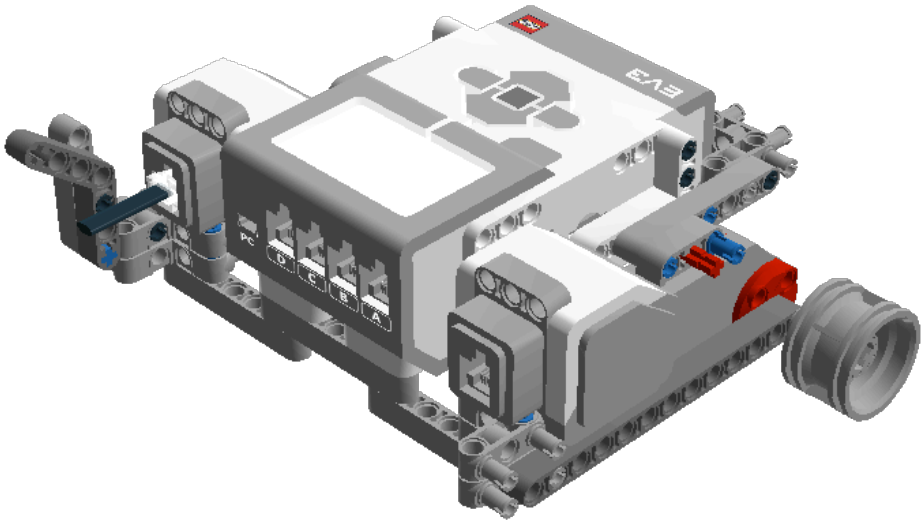

Step 21 of 40

1 x

1 x

1 x

1 x

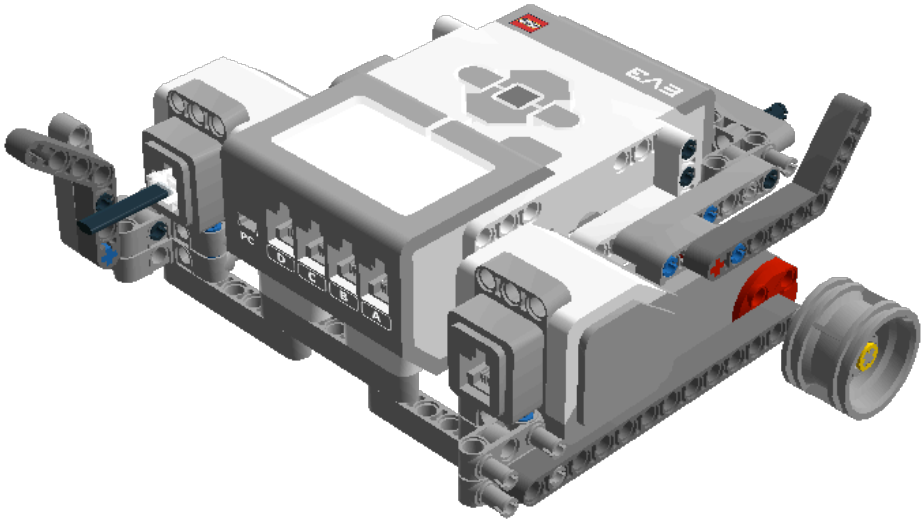

Step 22 of 40

1 x

1 x

1 x

1 x

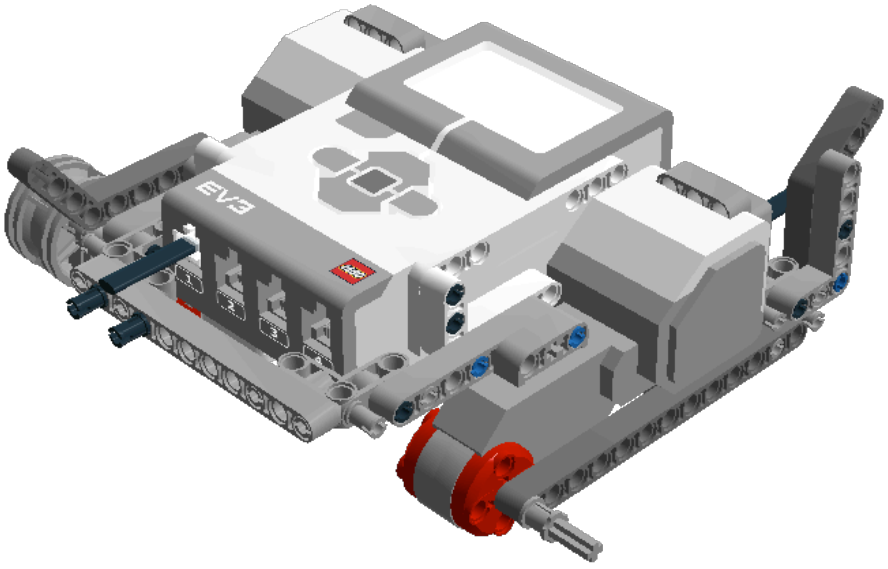

Step 23 of 40

1 x

1 x

1 x

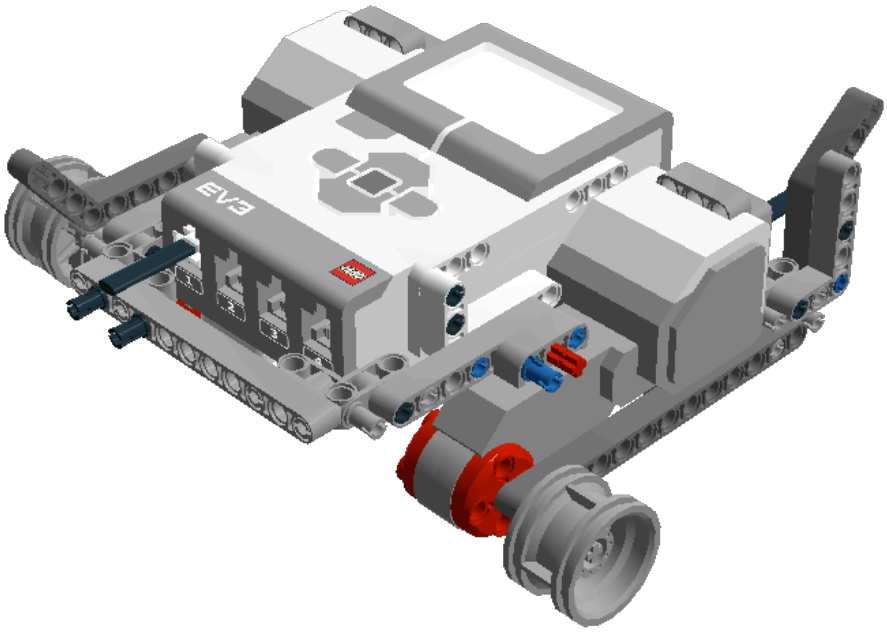

Step 24 of 40

1 x

1 x

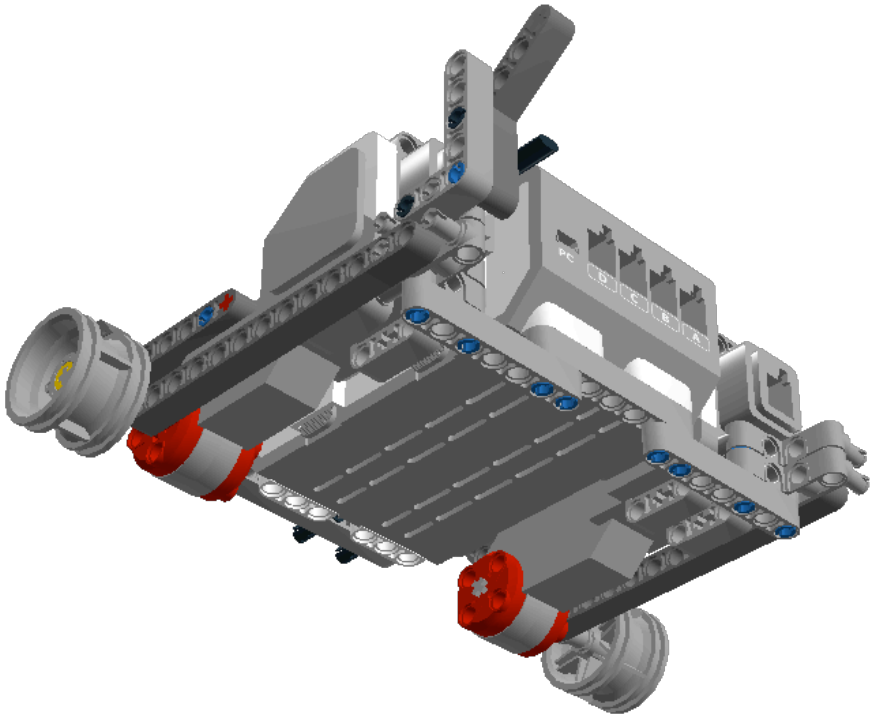

Step 25 of 40

1 x

1 x

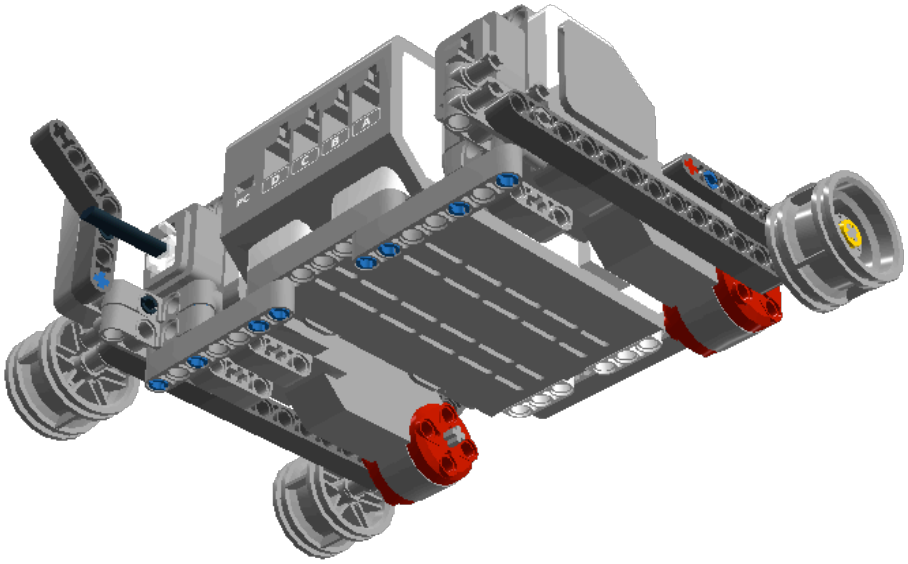

Step 26 of 40

1 x

1 x

1 x

1 x

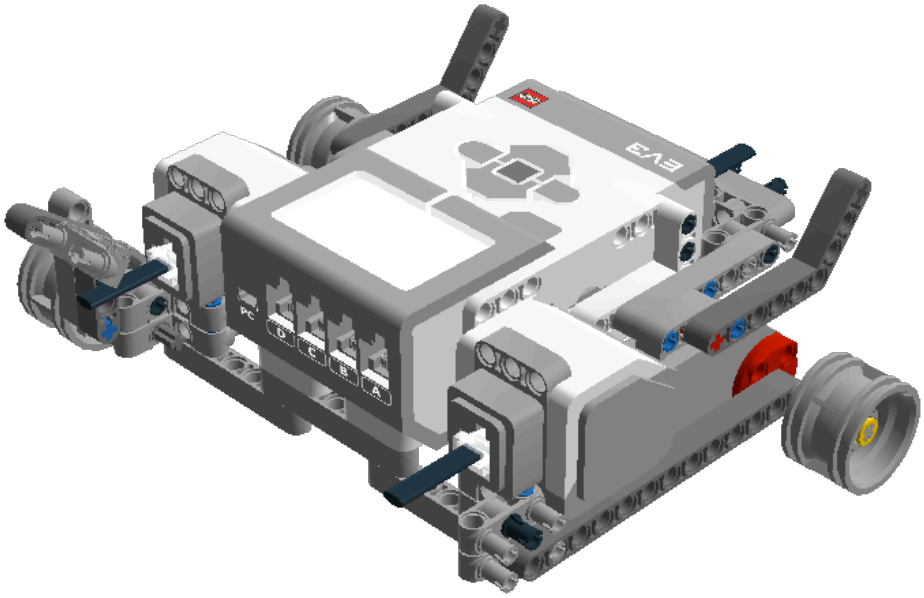

Step 27 of 40

1 x

1 x

1 x

1 x

Step 28 of 40

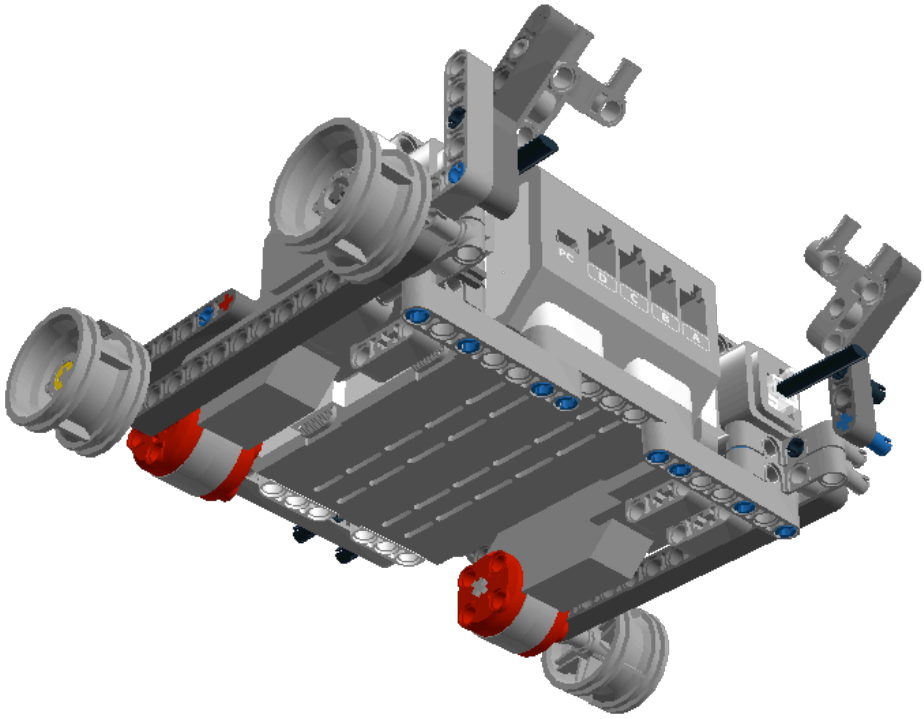

Step 29 of 40

1 x

1 x

1 x

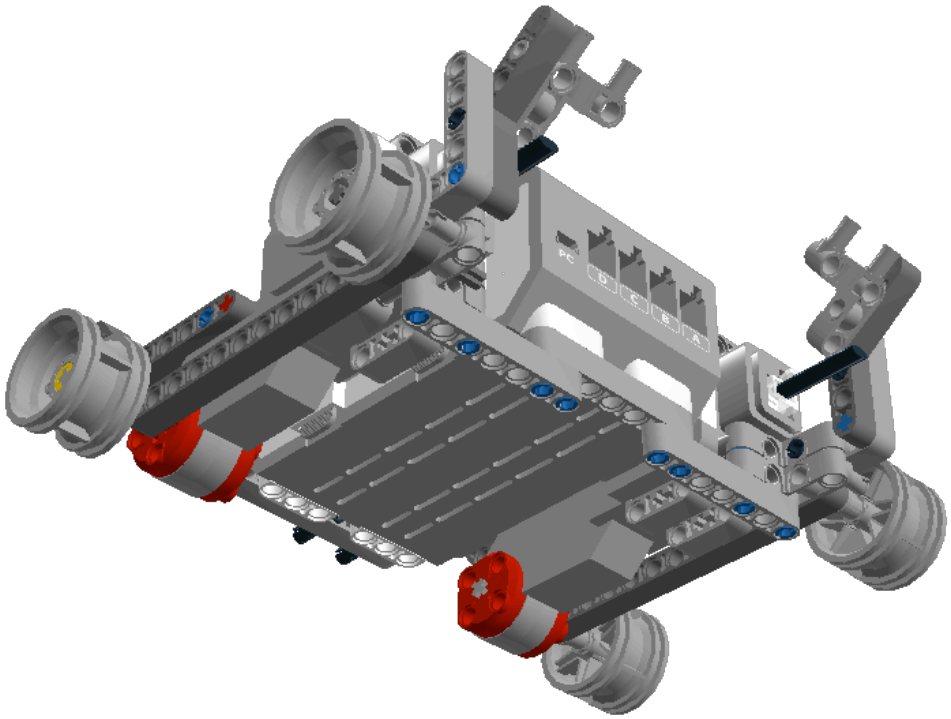

Step 30 of 40

1 x

1 x

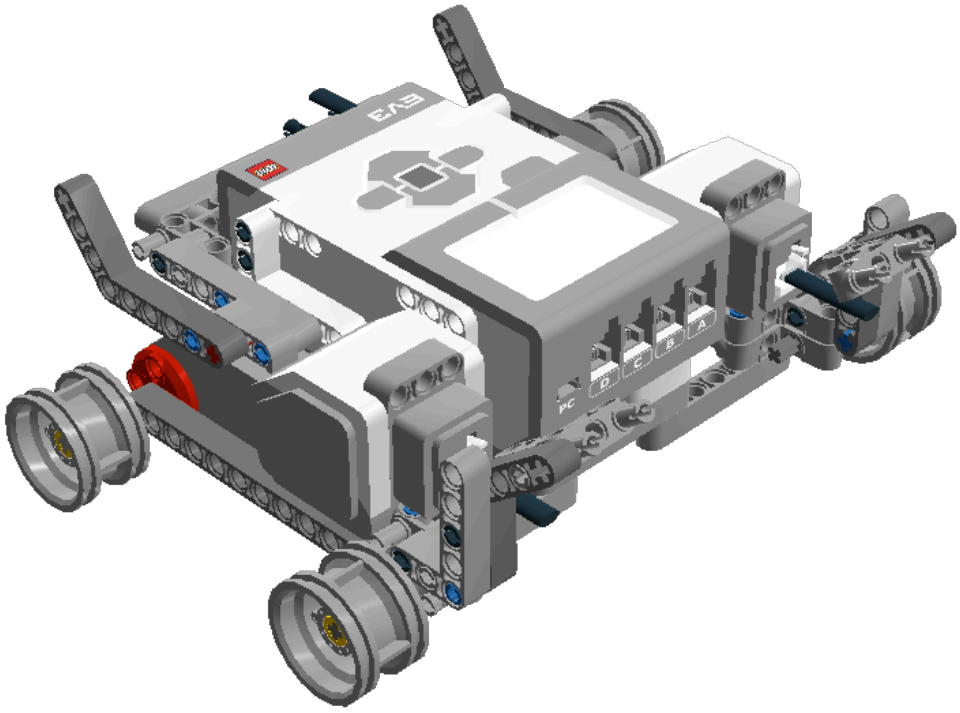

Step 31 of 40

2 x

1 x

1 x

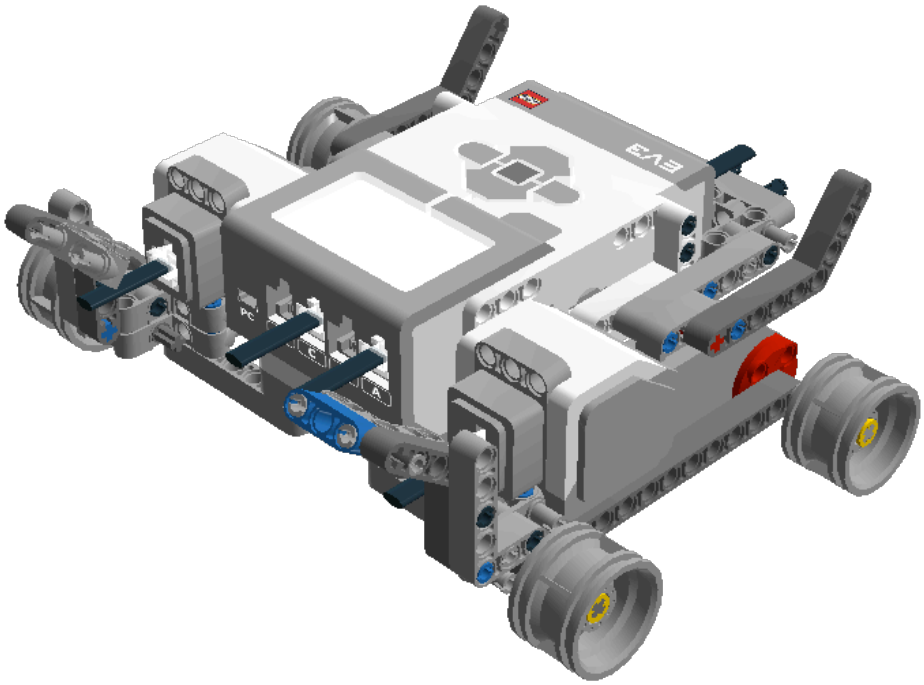

Step 32 of 40

1 x

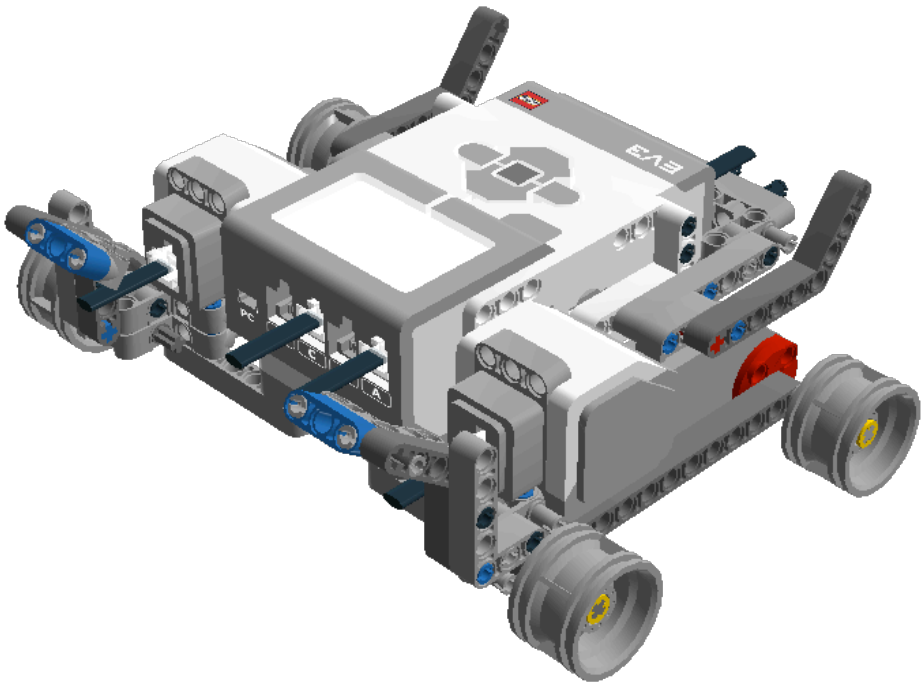

Step 33 of 40

1 x

1 x

Step 34 of 40

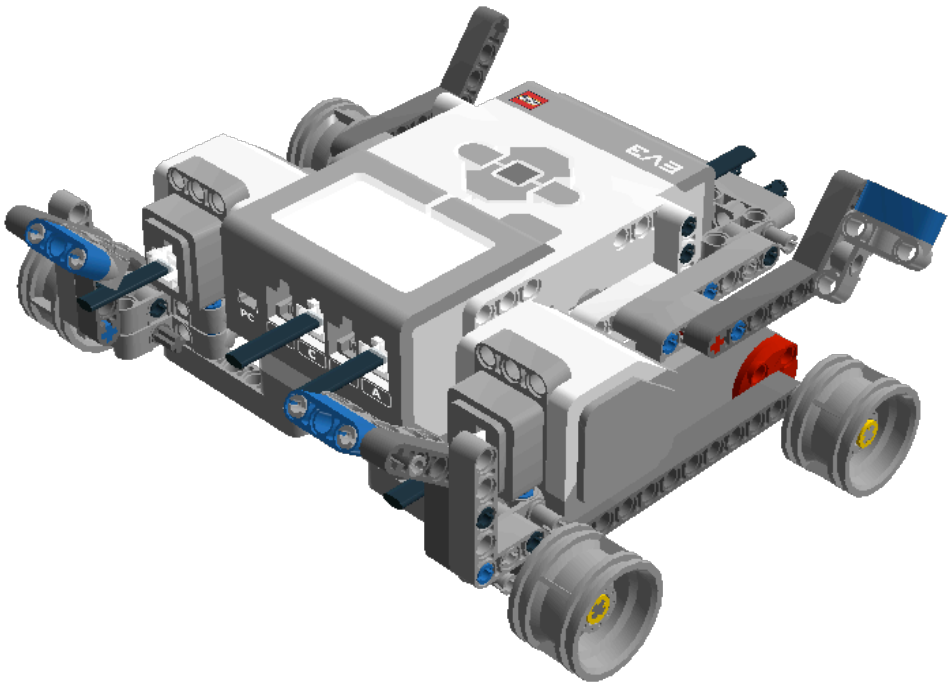

Step 35 of 40

1 x

1 x

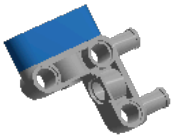

Step 36 of 40

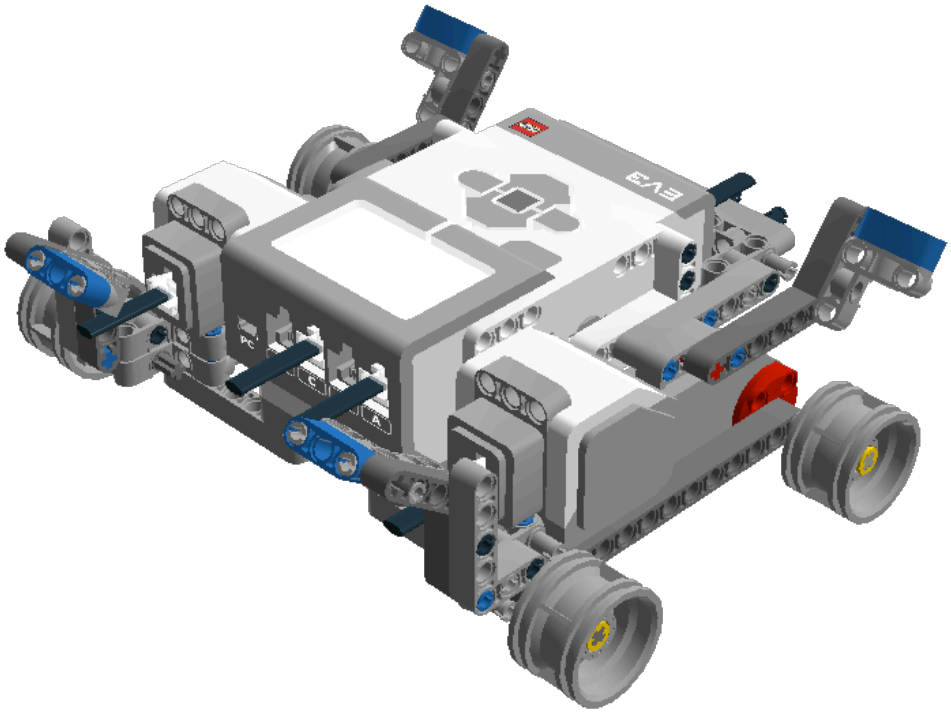

Step 37 of 40

1 x

1 x

Step 38 of 40

1 x

1 x

1 x

1 x

Step 39 of 40

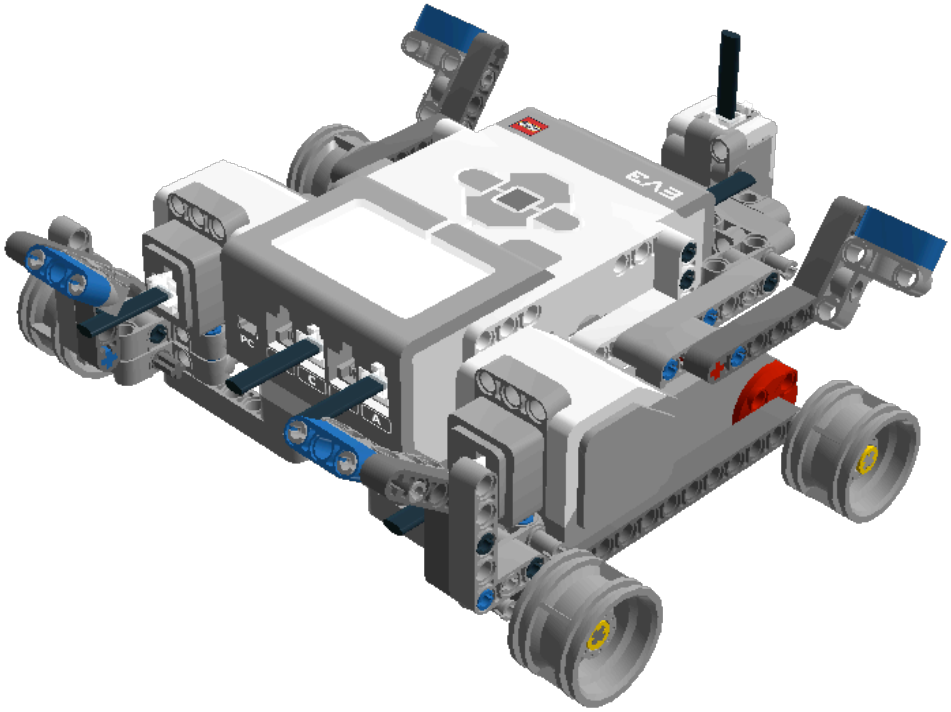

Step 40 of 40

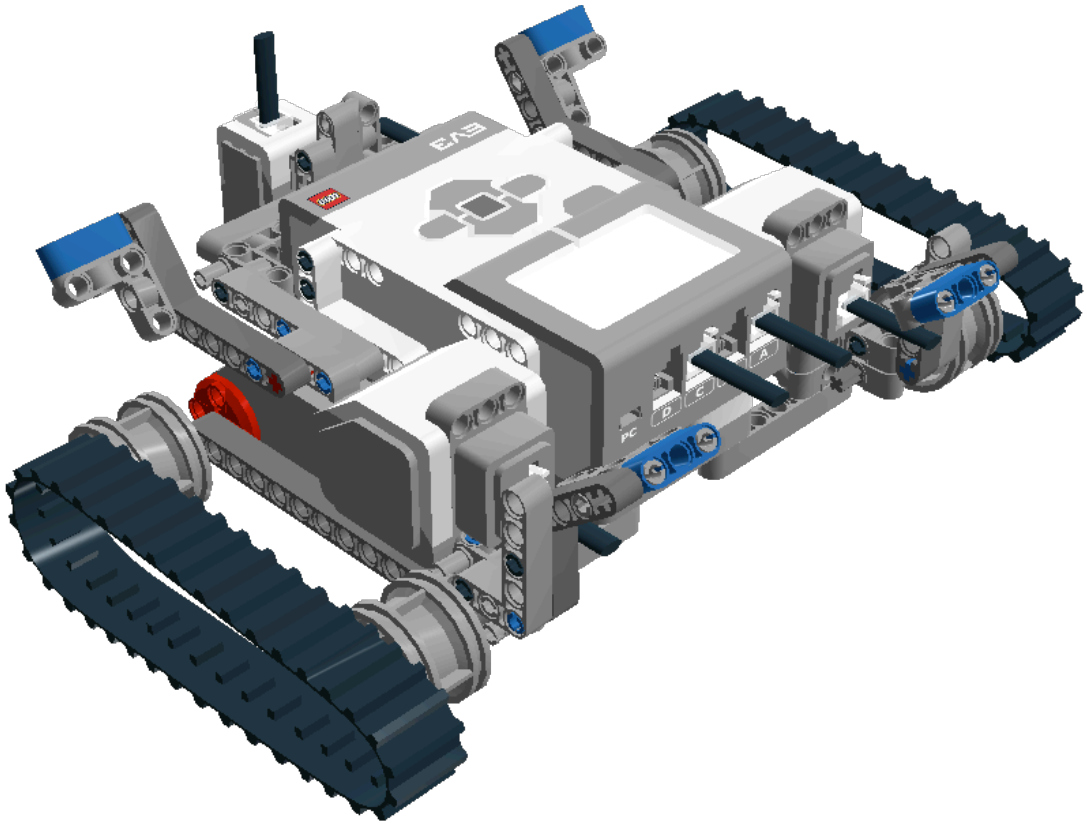

4 x		4297210	RIM WIDE W.CROSS 30x20 - Medium Stone Grey	2 x		4502834	CATERPILLAR TRACK - Black	6 x		4297187	Cable 208mm - Black,Transparent
1 x		6008919	MS, EV3, SENSOR, COLOUR - White,Bright Red,Black,Medium Blue,Medium Stone Grey	2 x		6057952	MS 2013 ENGINE - White,Bright Red,Medium Stone Grey	1 x		6009996	MS-EV3, P-BRICK - White,Transparent,Medium Stone Grey,Dark Stone Grey,Silver Metallic
4 x		4509376	TECHNIC 3M BEAM - Bright Blue	1 x		4211651	TECHNIC 5M BEAM - Medium Stone Grey	5 x		4495930	TECHNIC 7M BEAM - Medium Stone Grey
1 x		4611705	TECHNIC 11M BEAM - Medium Stone Grey	2 x		4522937	TECHNIC 13M BEAM - Dark Stone Grey	2 x		4211713	TECHNIC ANG. BEAM 3X5 90 DEG. - Medium Stone Grey
2 x		4585040	TECHNIC ANG. BEAM 3X5 90 DEG. - White	2 x		4210656	TECHNIC ANGULAR BEAM 4X4 - Dark Stone Grey	2 x		4210638	TECHNIC ANGULAR BEAM 4X6 - Dark Stone Grey

			2M CROSS AXLE W.				CONNECTOR PEG W.	

4 x		4239601	1/2 BUSH - Bright Yellow	2 x		4142865	GROOVE - Bright Red	16 x		4121715	FRICTION - Black
4 x		4211622	BUSH FOR CROSS AXLE - Medium Stone Grey	2 x		4206482	CONN.BUSH W.FRIC./CROSSALE - Bright Blue	14 x		4514553	CONNECTOR PEG W. FRICTION 3M - Bright Blue
2 x		4211805	CROSS AXLE 7M - Medium Stone Grey	2 x		4508553	CROSS AXLE 5,5 WITH STOP 1M. - Dark Stone Grey	11 x		4296059	Angular beam 90degr. w.4 snaps - Medium Stone Grey

© 2012 The LEGO Group. All rights reserved.
Use of the LEGO Digital Designer html print tool, signifies your agreement to the terms of use.